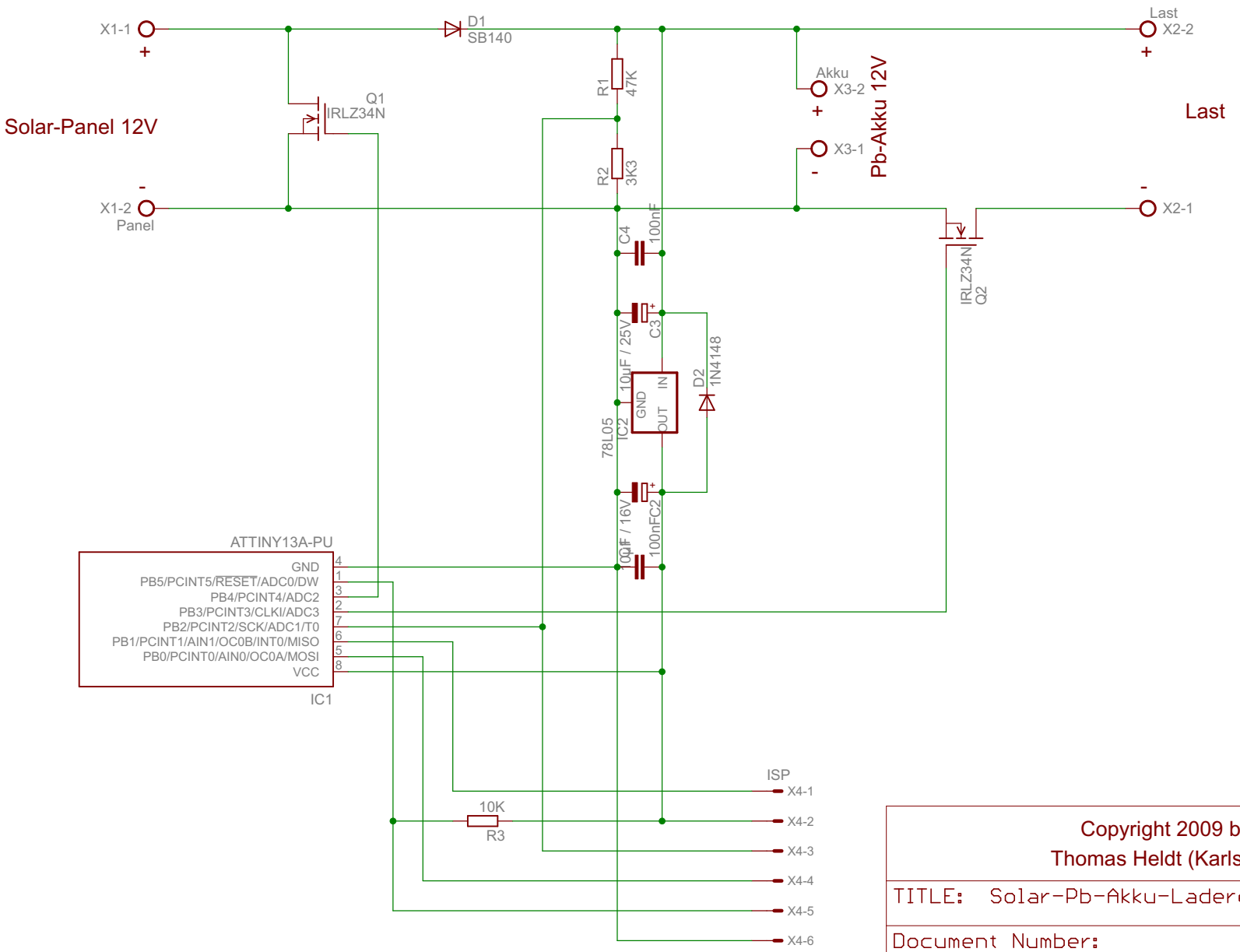

Copyright 2009 by
Thomas Heldt (Karlsbad)

TITLE: Solar-Pb-Akku-Laderegler2

Document Number:

REV: 1.0

Date: 17.02.2015 21:55:39

Sheet: 1/1